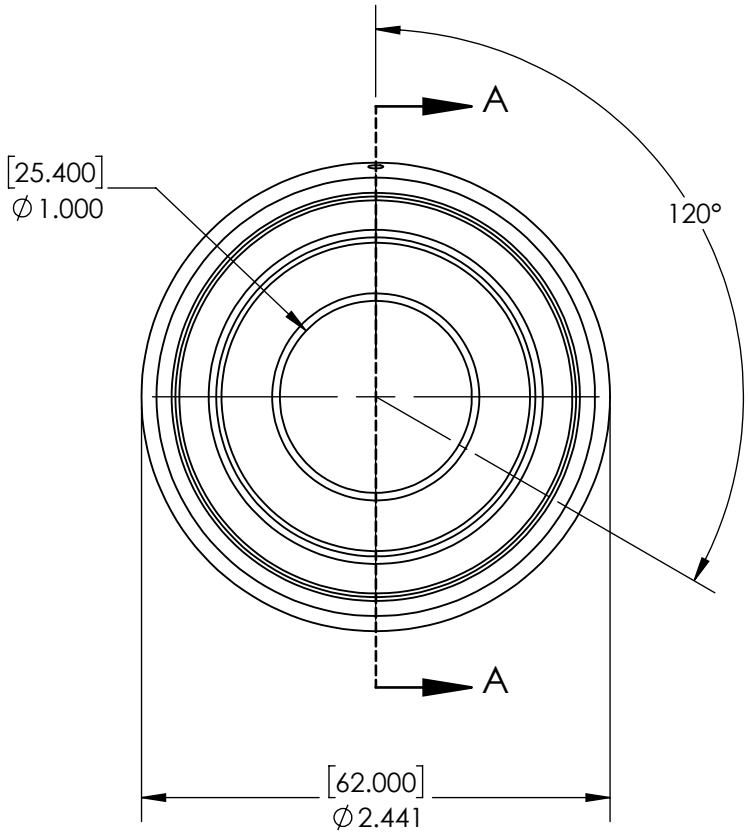

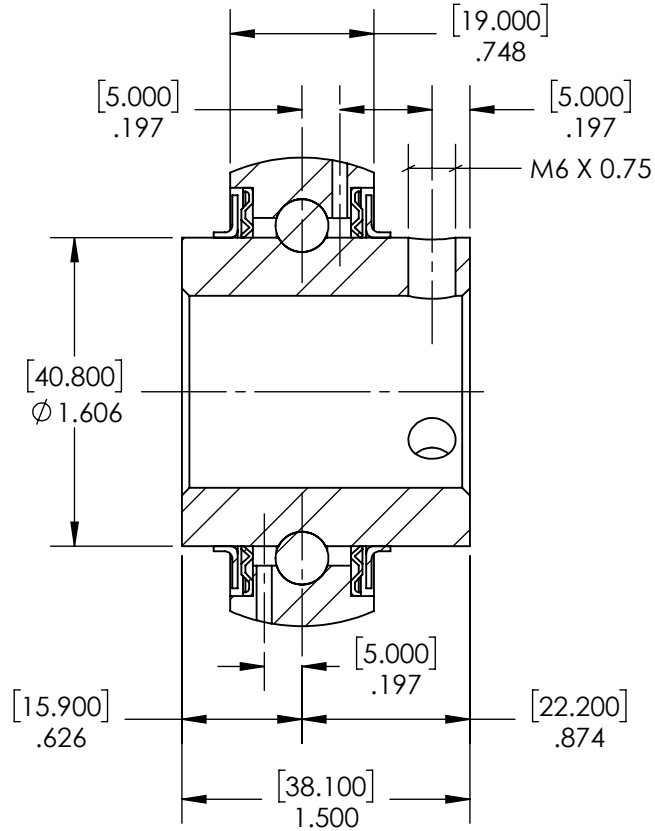

SECTION A-A

High Temp Bearings

TITLE:

1" MEDIUM DUTY BALL BEARING

SIZE	DWG. NO.	REV
A	UCX05-16	A

SCALE: NTS | WEIGHT: 0.75LBS | SHEET 1 OF 1

5 4 3 2 1